Create New Value 创·造·新价值

无机房电梯
Machine-Roomless elevator

永磁同步无齿轮曳引机
Permanent magnet synchronous and gearless traction machine

远程释放限速器
Long-distance release speed limiter

停电自动平层装置
Power failure automatic leveling device

控制柜
Control cabinet

申龙无机房电梯示意图

Seloon conceptual diagram to elevator without machine roomeless

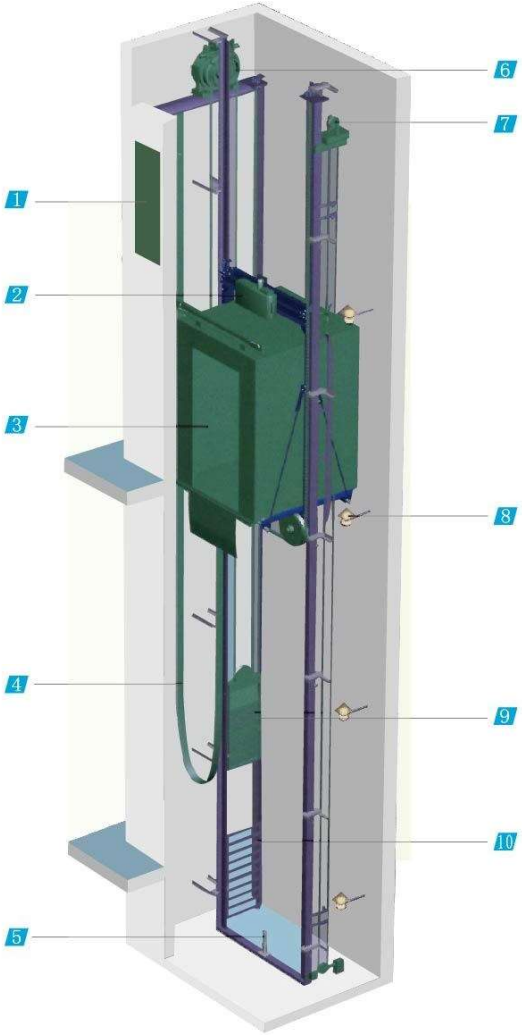

1.控制柜 Control cabinet

2.轿顶检修装置 Car top inspection device

3.轿厢 Car

4.随行电缆 Carrying cable

5.轿厢缓冲器 Car buffer

6.曳引机 Traction machine

7.限速器 Speed limiter

8.井道照明 Well lighting

9.对重装置 Counterweight device

10.底坑防护栏 Pit protection railing

Worry-free Elevator Butler Service
全程无忧的电梯管家服务

电梯需要定期维护保养才能保证最佳的运行状态，有了我们遍布国内及国外的专业维修网络，即使是最复杂的技术难题也能得到快速有效的解决，我们提供灵活的维保方案由您选择，让您在选择了申龙的同时，也拥有了更好的服务。

电梯管家服务意味着卓越优质的服务，及时有效的维修和预防性零配件更换，我们的努力让您的电梯始终处于稳定、高效的运行中。定期的服务报告和持续的档案追踪简化了流程，协助维保工作的顺利进行，确保每一个客户都能畅享无忧。

Elevator requires regular maintenance to ensure the best operation status. With our professional maintenance network at home and abroad, even the most complex technical problems can be resolved quickly and efficiently. We offer flexible maintenance plans for you to choose, allowing you to have better services by choosing Seloon.

The elevator butler service means superior quality service, and timely and effective maintenance and preventive replacement of spare parts. With our great efforts, your elevator will be always maintained in a stable and efficient operation. Regular service reports and continuous file tracking simplify the process, contribute to smooth implementation of repair and maintenance works, and ensure that every customer can enjoy worry-free service.

无机房乘客电梯土建图

Machine roomless passenger elevator construction layout drawing

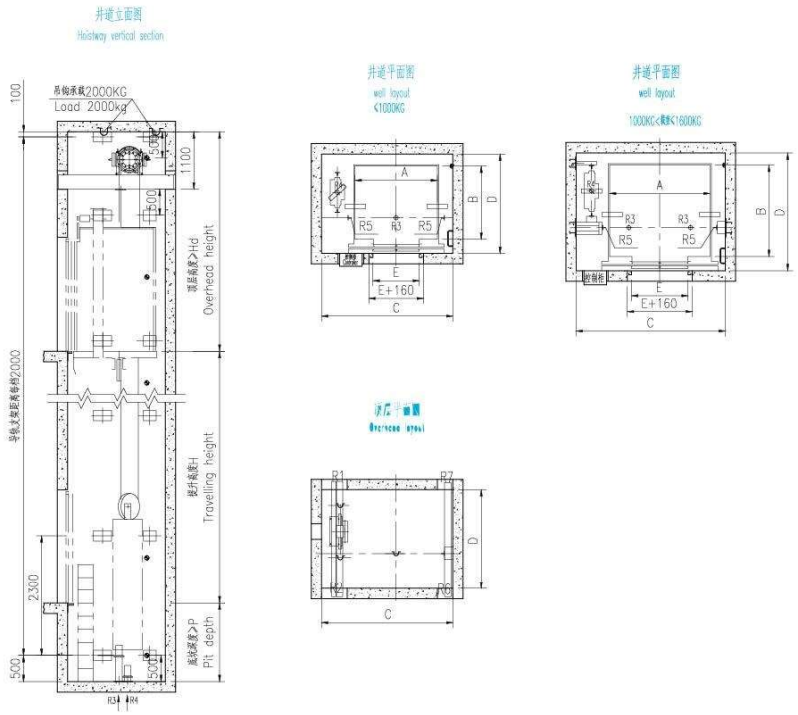

无机房客梯主要技术参数

型号 Model	额定载重量 Rated carrying	额定载客数 Rated passenger load	额定速度 Rated speed	轿厢尺寸 Car size (宽 A×深 B) (Width A×depth B)	开门宽度 E Door open width	井道尺寸 Hoistway size (宽 C×深 D) (Width C×depth D)	底坑深度 P Pit depth	顶层高度 Q Top height	电机功率 Motor power	作用力 Force (KN)						
	(kg)	(人)	(m/s)	(mm)	(mm)	(mm)	(mm)	(mm)	(kw)	R1	R2	R3	R4	R5	R6	R7
TKJW630/1.0	630	8	1.0	1100×1400	800	2150×1900	1500	4200	4.3	30	25	65	52	15	18	18
TKJW630/1.5-1.75	630	8	1.5-1.75	1100×1400	800	2150×1900	1700	4300	7.5	30	25	65	52	15	18	18
TKJW800/1.0	800	10	1.0	1350×1400	800	2350×1900	1500	4200	5	35	30	80	64	17	20	20
TKJW800/1.5-1.75	800	10	1.5-1.75	1350×1400	800	2350×1900	1700	4300	9	35	30	80	64	17	20	20
TKJW1000/1.0	1000	13	1.0	1600×1400	900	2550×1900	1500	4200	6	40	35	80	60	20	24	24
TKJW1000/1.5-1.75	1000	13	1.5-1.75	1600×1400	900	2550×1900	1700	4300	11.7	40	35	80	60	20	24	24
TKJW1350/1.0	1350	18	1.0	1950×1500	1100	2900×2100	1500	4200	9	50	50	60	88	28	30	30
TKJW1350/1.5-1.75	1350	18	1.5-1.75	1950×1500	1100	2900×2100	1700	4300	15	50	50	60	88	28	30	30
TKJW1600/1.0	1600	21	1.0	1950×1750	1100	2900×2250	1500	4200	10	56	56	64	100	32	35	35
TKJW1600/1.5-1.75	1600	21	1.5-1.75	1950×1750	1100	2900×2250	1700	4300	17.5	56	56	64	100	32	35	35

无机房观光电梯土建图

Machine roomless panoramic elevator construction layout drawing

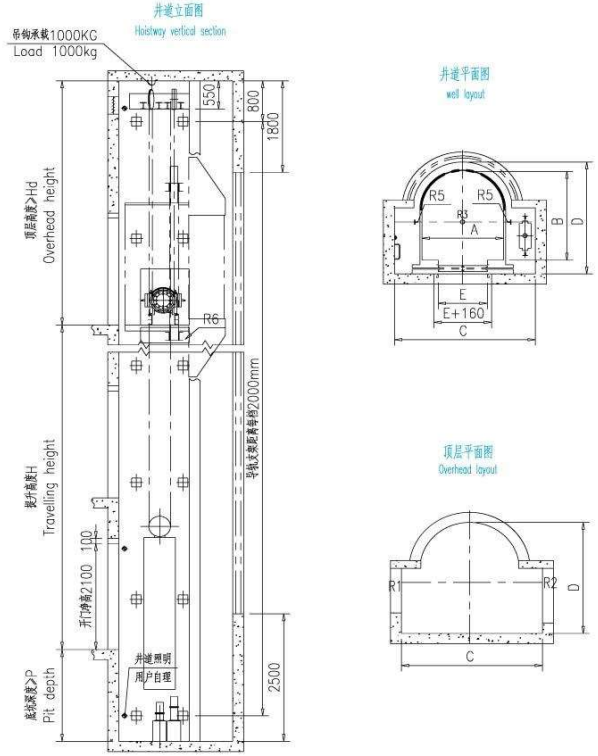

无机房观光梯主要技术参数

型号 Model	额定载重量 Rated carrying	额定载客数 Rated passenger load	额定速度 Rated speed	轿厢尺寸 Car size (宽 A×深 B) (Width A×depth B)	开门宽度 E Door open width	井道尺寸 Hoistway size (宽 C×深 D) (Width C×depth D)	底坑深度 P Pit depth	顶层高度 Q Top height	电机功率 Motor power	作用力 Force (KN)					
	(kg)	(人)	(m/s)	(mm)	(mm)	(mm)	(mm)	(mm)	(kw)	R1	R2	R3	R4	R5	R6
TGJW630/1.0	630	8	1.0	1100×1630	800	2450×2150	1800	4800	4.3	45	30	70	57	17	38
TGJW630/1.5-1.75	630	8	1.5-1.75	1100×1630	800	2450×2150	1800	4800	7.5	45	30	70	57	17	38
TGJW800/1.0	800	10	1.0	1300×1680	800	2500×2200	1800	4800	5	50	35	84	68	17	42
TGJW800/1.5-1.75	800	10	1.5-1.75	1300×1680	800	2500×2200	1800	4800	9	50	35	84	68	17	42
TGJW1000/1.0	1000	13	1.0	1500×1750	900	2600×2200	1800	4800	6	55	41	100	80	25	48
TGJW1000/1.5-1.75	1000	13	1.5-1.75	1500×1750	900	2600×2200	1800	4800	11.7	55	41	100	80	25	48
TGJW1600/1.0	1600	21	1.0	1600×2300	1100	2750×2800	1800	4800	10	80	64	72	112	36	72
TGJW1600/1.5-1.75	1600	21	1.5-1.75	1600×2300	1100	2750×2800	1800	4800	17.5	80	64	72	112	36	72

无机房载货（1000kg）电梯土建图

Machine roomless goods elevator (1000kg) construction layout drawing

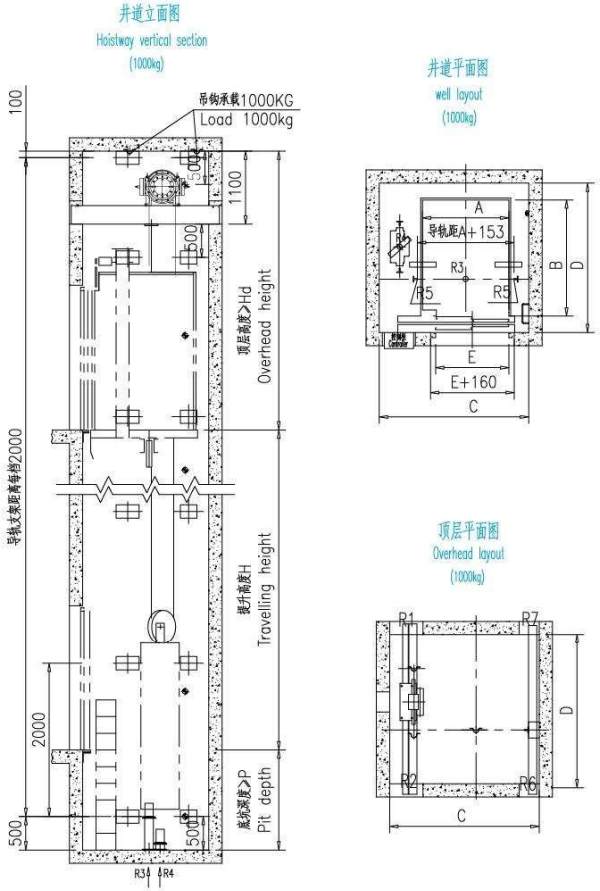

无机房货梯主要技术参数

型号 Model	额定载重量 Rated carrying	额定载客数 Rated passenger load	额定速度 Rated speed	轿厢尺寸 Car size (宽 A×深 B) (Width A×depth B)	开门宽度 E Door open width	井道尺寸 Hoistway size (宽 C×深 D) (Width C×depth D)	底坑深度 P Pit depth	顶层高度 Q Top height	电机功率 Motor power	作用力 Force (KN)						
	(kg)	(人)	(m/s)	(mm)	(mm)	(mm)	(mm)	(mm)	(kw)	R1	R2	R3	R4	R5	R6	R7
THJW1000/0.5	1000		0.5	1300×1750	1100	2100×2250	1500	4200	6	40	35	92	72	58	24	24

无机房载货（2000kg/1600kg）电梯土建图

Machine roomless goods elevator (2000kg/1600kg) construction layout drawing

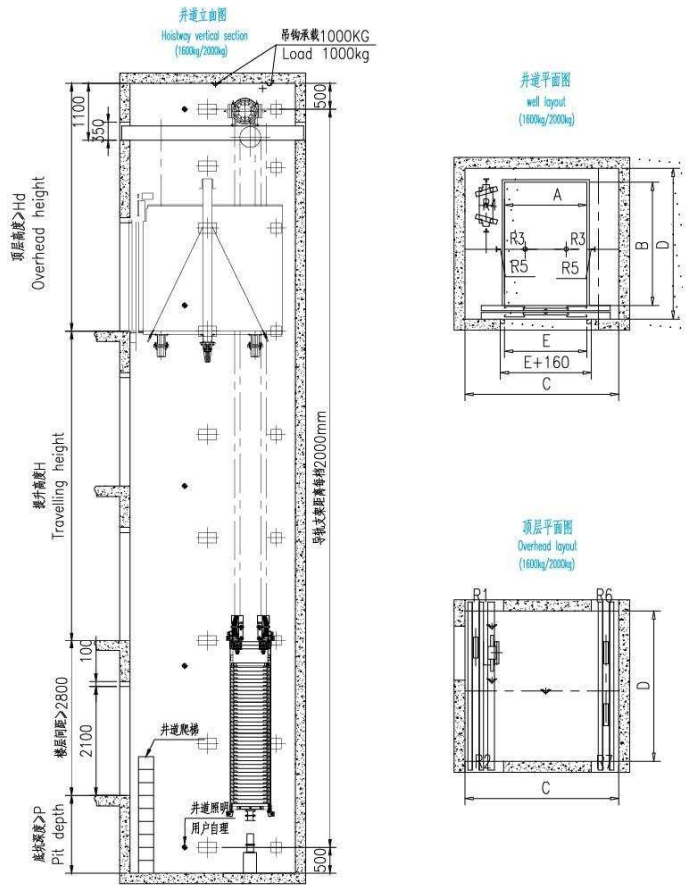

无机房货梯主要技术参数

型号 Model	额定载重量 Rated carrying	额定载客数 Rated passenger load	额定速度 Rated speed	轿厢尺寸 Car size (宽 A×深 B) (Width A×depth B)	开门宽度 E Door open width	井道尺寸 Hoistway size (宽 C×深 D) (Width C×depth D)	底坑深度 P Pit depth	顶层高度 Q Top height	电机功率 Motor power	作用力 Force (KN)						
	(kg)	(人)	(m/s)	(mm)	(mm)	(mm)	(mm)	(mm)	(kw)	R1	R2	R3	R4	R5	R6	R7
THJW1600/0.5	1600		0.5	1500×2250	1500	2800×2750	1500	4800	5	61	40	64	76	80	35	35
THJW2000/0.5	2000		0.5	1500×2700	1500	2800×3200	1500	4800	6	75	75	76	112	95	40	40